WESTWOOD ROBOTICS

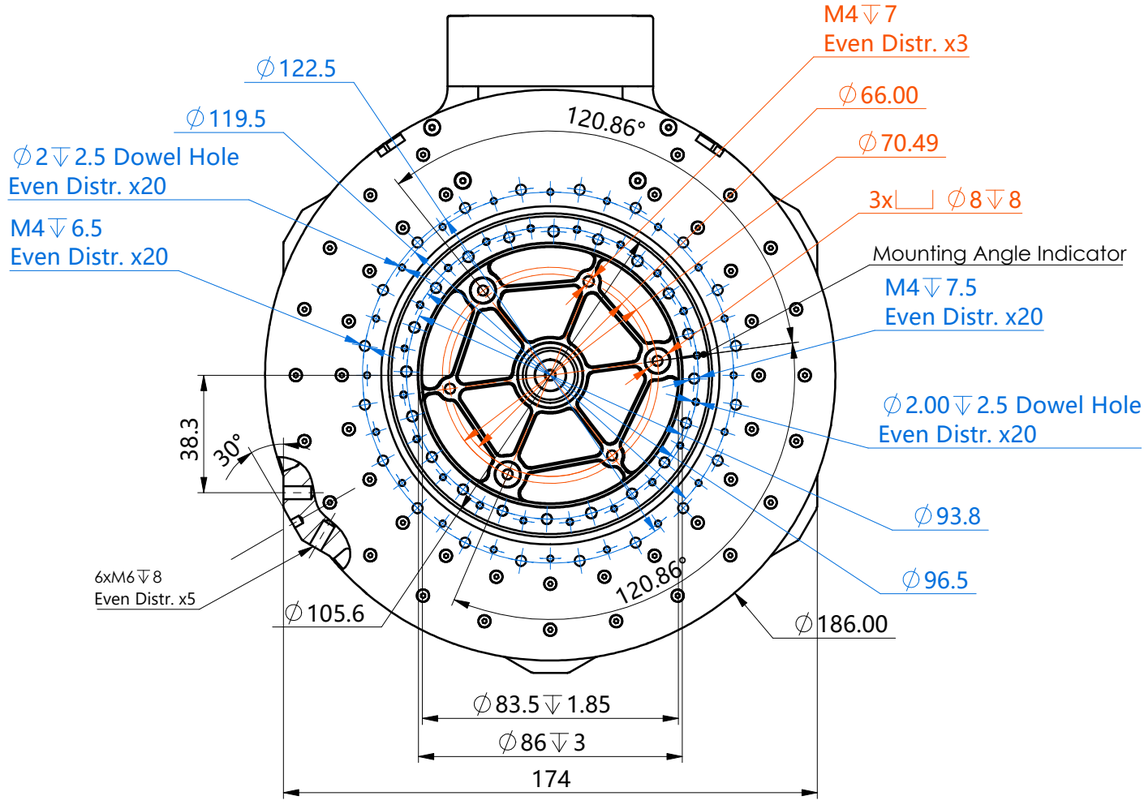

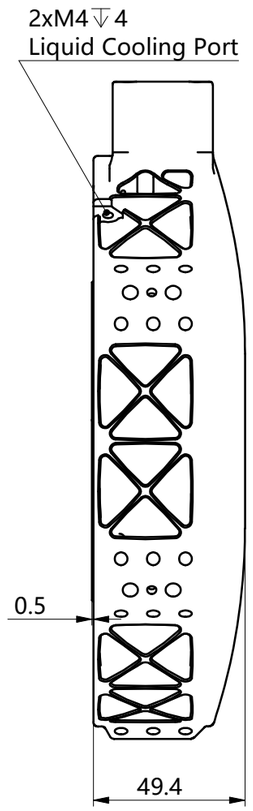

Placeholder for external capacitor and power and signal cable/connectors.

Slightly bigger than actual size for interference avoidance purposes.

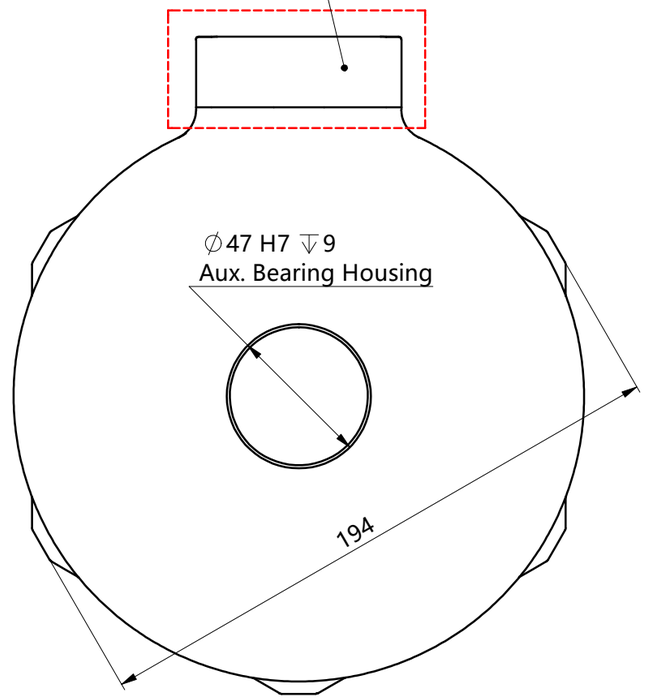

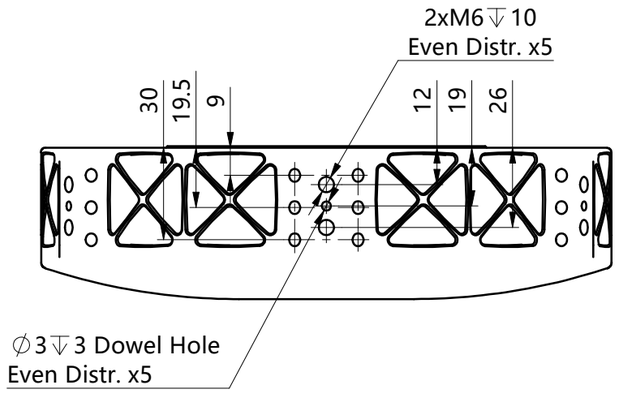

PROPRIETARY AND CONFIDENTIAL

THE INFORMATION CONTAINED IN THIS DRAWING IS THE SOLE PROPERTY OF **WESTWOOD ROBOTICS CORPORATION**. ANY REPRODUCTION IN PART OR AS A WHOLE WITHOUT THE WRITTEN PERMISSION OF **WESTWOOD ROBOTICS CORPORATION** IS PROHIBITED.

NEXT ASSY	USED ON
APPLICATION	

UNLESS OTHERWISE SPECIFIED:
DIMENSIONS ARE IN mm

TOLERANCE:

x	±0.1
x.x	±0.05
x.xx	±0.01
ANGLES	±0.2°

MATERIAL: 7075-T6

DRW DATE: 09/21/23

DRW BY:

	NAME	DATE
DRAWN		
CHECKED		
ENG APPR.		
MFG APPR.		
Q.A.		

FINISH: Anodized

DO NOT SCALE DRAWING

Kodiak BEAR V1

SIZE	DWG. NO.	REV.
A3	CB01	A

SCALE:1:2 | WEIGHT: 2.45kg | SHEET 1 OF 1